c UL us LISTED



FIGURE 1
IT

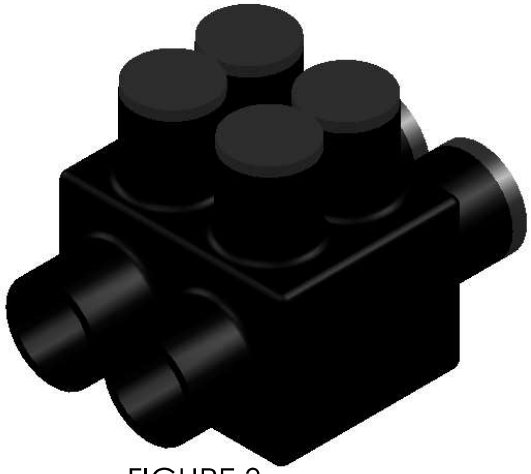

FIGURE 3
ITH

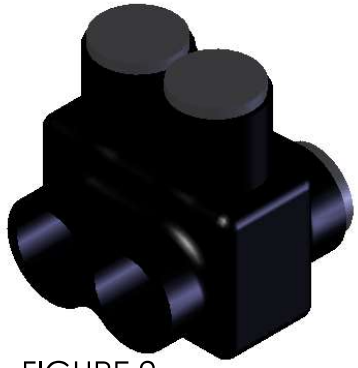

FIGURE 2
DUAL ENTRY

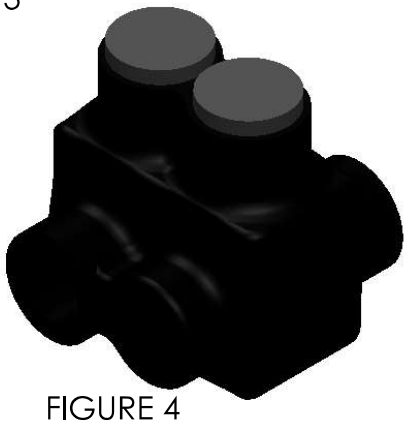

FIGURE 4
ITO

PART #	FIG. #	WIRE RANGE	HEX SIZE	L	W	H
IT4	1	4 - 14	SLOTTED	1.12	1.18	1.38
ITO4	4	4 - 14	SLOTTED	1.12	1.25	1.38
IT1/0	1	1/0 - 14	3/16	1.62	1.62	1.75
ITO1/0	4	1/0 - 14	3/16	1.62	1.75	1.75
IT3/0	1	3/0 - 6	1/4	1.84	1.75	1.87
ITO3/0	4	3/0 - 6	1/4	1.84	1.87	1.87
IT250	2	250 - 6	5/16	2.12	2.25	2.25
IT350	2	350 - 6	5/16	2.47	2.50	2.44
IT500	2	500 - 4	5/16	2.81	2.87	2.94
IT750*	2	750 - 250	3/8	3.48	3.50	3.50
IT600††	2	600 - 6	5/16	2.34	2.94	3.05
ITH750	3	750 - 250	5/16	3.48	4.50	3.50

†† 600 SERIES ARE AL7CU AND 75°C

*NOT UL LISTED

NOTES:
1. CONNECTOR MANUFACTURED FROM 6061-T6 ALUMINUM ALLOY.
2. UL LISTED PER UL486A/B SPECIFICATIONS FOR 600V.
3. DUAL RATED FOR 90°C COPPER AND/OR ALUMINUM CONDUCTOR.
4. COLD TEMPERATURE RATED TO -45°C.
5. HIGH DIELECTRIC STRENGTH INSULATION IS ABRASION, CHEMICAL AND UV RESISTANT.

CONTACT NSi FOR SALES @ 800.321.5847

POLARIS SALES . CO . INC

PROPRIETARY AND CONFIDENTIAL

THE INFORMATION CONTAINED IN THIS DRAWING IS THE SOLE PROPERTY OF POLARIS SALES CO. INC. ANY REPRODUCTION IN PART OR AS A WHOLE WITHOUT THE WRITTEN PERMISSION OF POLARIS SALES CO. INC. IS PROHIBITED.

11625 PROSPEROUS DRIVE ODESSA, FL 33556

TITLE: IT SERIES INSULATED CONNECTORS

	NAME	DATE
DRAWN BY	S.PARRY	6/13/2012

DWG. NO. IT SERIES

MATERIAL: N/A | NOT TO SCALE | SHEET: 1 OF 1